AS-set for KV 50/TAV 50

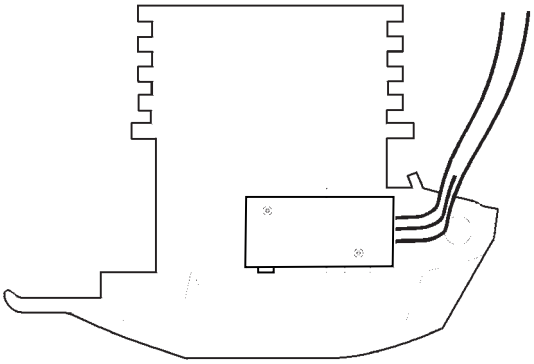

AS-set 40 1415 50 on KV 50

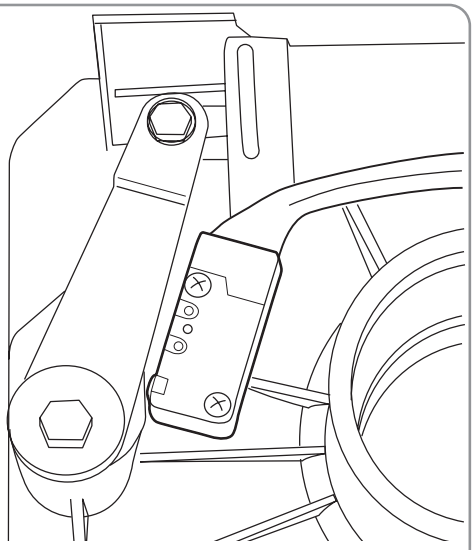

AS-set 40 1415 50 on TAV 50

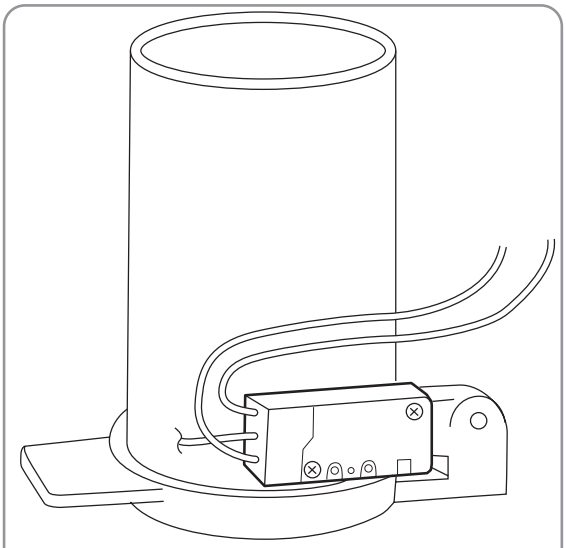

AS-set 40 1417 60 on KV 50 Alu

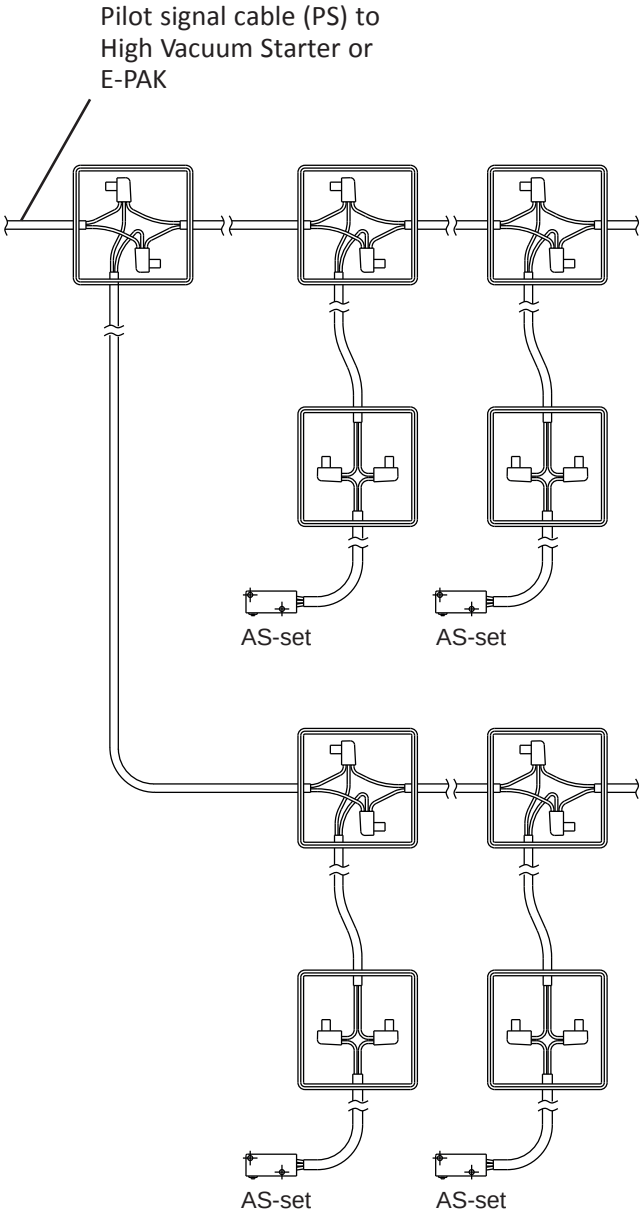

Connect all AS-sets in parallel